cintropur®

WATERFILTRATION & TREATMENT

Technical Datasheets

RESIDENTIAL FILTERS

INDUSTRIAL FILTERS

WATER STERILIZATION BY UV RADIATION

airwatec
AIR AND WATER TECHNOLOGIES

Hochstrasse 104d
B-4700 Eupen

Tel. +32(0)87 59 83 30
Fax +32(0)87 59 84 40

www.cintropur.com
info@cintropur.com

Technical Datasheet

Filter type:	**SL160**
Connection diameter:	¾ ”
Average flow rate (m³/h):	3 at ΔP 0,2 bar
Working pressure (bar):	8
Max. operating pressure (bar):	12
Max. operating temperature (°C):	50
Weight (kg):	0,68 / 0,8 (with packaging)
Packaging in mm:	190 x 185 x 128
Filter head:	Polypropylene (PP)
Bowl:	SAN
Filtering support:	PP + 20% fiberglass
Wrench:	ABS
Seals:	O-ring butadiene-acrylonitrile (NBR)
Centrifugal vane + cap :	Polyethylene (PE)
Filtering sleeve:	Polyester
Filtration surface (cm²):	170
Original equipment:	Filtering sleeve 25 µm, wrench, wall fixation in PP + 30% fiberglass
Filtering fineness available (µm): (packs of 5 sleeves)	Non-washable: 5 - 10 - 25 - 50 - 100

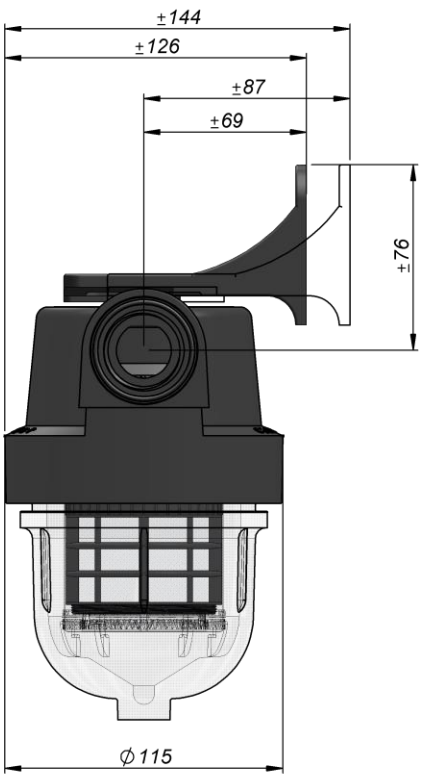

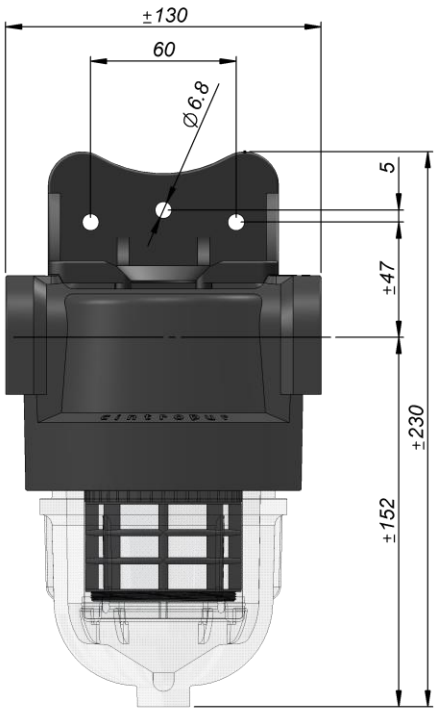

Airwatec SA | Hochstrasse 104d |4700 Eupen | Belgium
T.: +32 87 59 83 30 | F.: +32 87 59 84 40 | E.: info@airwatec.com
VAT/BTW BE 0464.530.129 | www.airwatec.com

Technical Datasheet

Filter type:	**SL240**
Connection diameter:	¾ ” or 1”
Average flow rate (m³/h):	3,5 (3/4’’) – 4,5 (1’’) at ΔP 0,2 bar
Working pressure (bar):	8
Max. operating pressure (bar):	12
Max. operating temperature (°C):	50
Weight (kg):	0,9 / 1,05 (with packaging)
Packaging in mm:	324 x 134 x 133
Filter head:	Polypropylene (PP)
Bowl:	SAN
Filtering support:	PP + 20 % fiberglass
Seals:	O-ring butadiene-acrylonitrile (NBR)
Centrifugal vane + cap :	Polyethylene (PE)
Filtering sleeve:	Polyester (non washable) or nylon (washable)
Wrench:	ABS
Filtration surface (cm²):	440
Original equipment:	Filtering sleeve 25 µm, wrench, wall fixation in PP + 30% fiberglass
Filtering fineness available (µm): (packs of 5 sleeves)	Non-washable : 1 - 5 - 10 - 25 - 50 - 100 Washable : 150 - 300

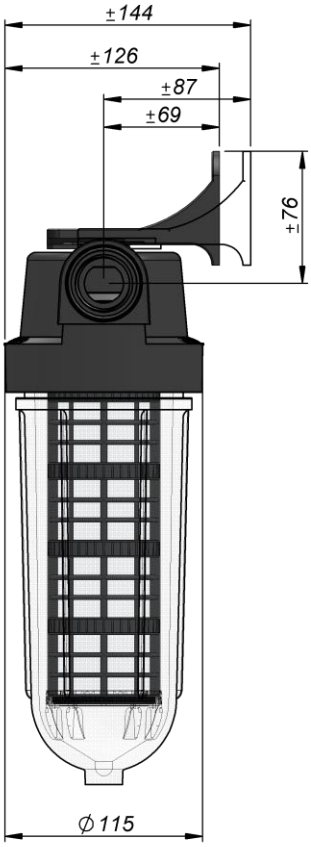

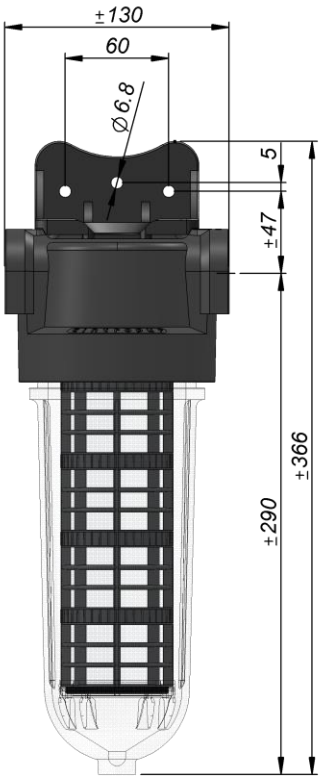

Airwatec SA | Hochstrasse 104d |4700 Eupen | Belgium
T.: +32 87 59 83 30 | F.: +32 87 59 84 40 | E.: info@airwatec.com
VAT/BTW BE 0464.530.129 | www.airwatec.com

Technical Datasheet

Filter type:	**SL240 TE-CTN**
Connection diameter:	¾’’ or 1”
Average flow rate (m³/h):	2 at ΔP 0,8 bar
Working pressure (bar):	8
Max. operating pressure (bar):	12
Max. operating temperature (°C):	50
Weight (kg):	1,23 / 1,42 (with packaging)
Packaging in mm:	324 x 134 x 133
Filter head:	Polypropylene (PP)
Bowl:	SAN
Wrench:	ABS
Seals:	O-ring butadiene-acrylonitrile (NBR)
CTN container capacity (litres):	0,57
CTN container for activated carbon:	SAN (body) 0,6 mm + PP with 20% fiberglass (cap) 0,3mm
Original equipment:	CTN filled with activated carbon, wrench, wall fixation in PP + 30% fiberglass

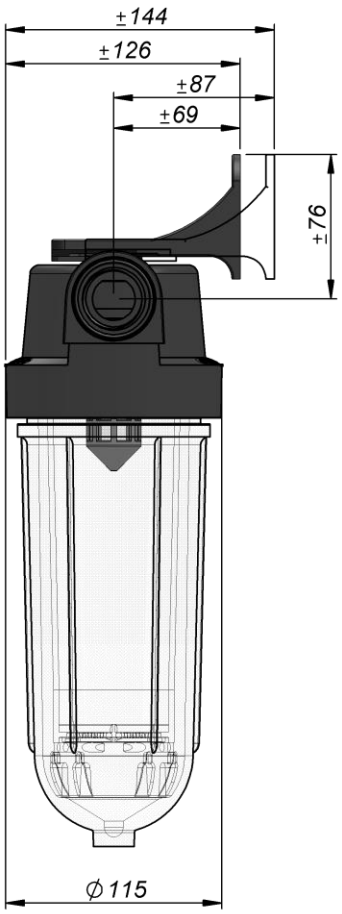

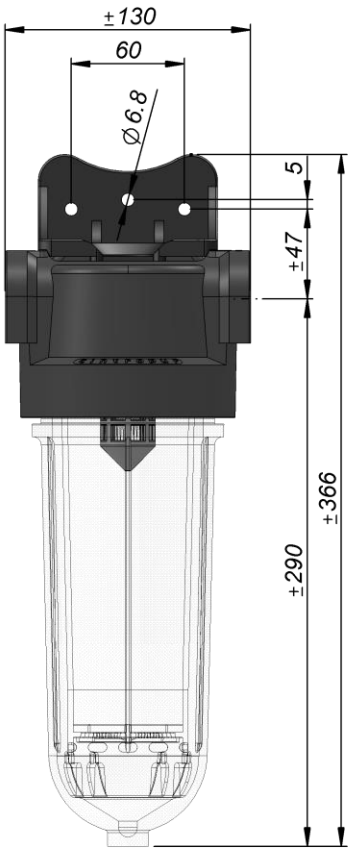

Airwatec SA | Hochstrasse 104d |4700 Eupen | Belgium
T.: +32 87 59 83 30 | F.: +32 87 59 84 40 | E.: info@airwatec.com
VAT/BTW BE 0464.530.129 | www.airwatec.com

Technical Datasheet

Filter type:	**SL240 DUO-CTN**
Connection diameter:	¾ ” or 1”
Average flow rate (m³/h):	1,8 at ΔP 0,8 bar
Working pressure (bar):	8
Max. operating pressure (bar):	12
Max. operating temperature (°C):	50
Weight (kg):	1,85 / 2,37 (with packaging)
Packaging in mm:	328 x 265 x 120
Filter head:	Polypropylene (PP)
Bowl:	SAN
Wrench:	ABS
Filtering support:	PP + 20% fiberglass
Seals:	O-ring butadiene-acrylonitrile (NBR)
Centrifugal vane + cap :	Polyethylene (PE)
Filtering sleeve:	Polyester (non-washable) or nylon (washable)
Filtration surface + capacity:	440 cm² with sleeve + 0,57L with activated carbon
CTN container for activated carbon:	SAN (corps) 0,6 mm + PP avec 20% fiberglass(couvercle) 0,3mm
Original equipment:	Filtering sleeve 25 µm, CTN filled with activated carbon, wrench, 2 wall fixations in PP + 30% fiberglass
Filtering fineness available (µm): (packs of 5 sleeves)	Non-washable : 1 - 5 - 10 - 25 - 50 - 100 Washable : 150 - 300

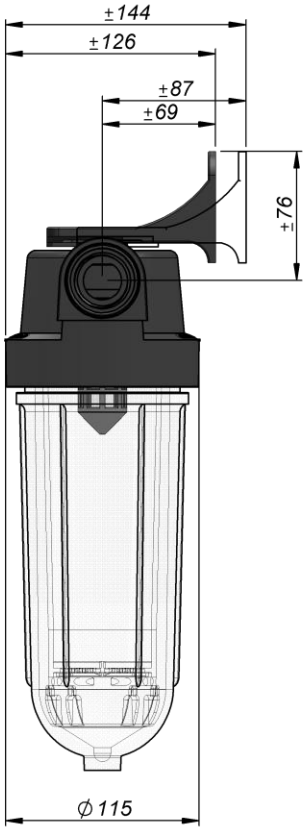

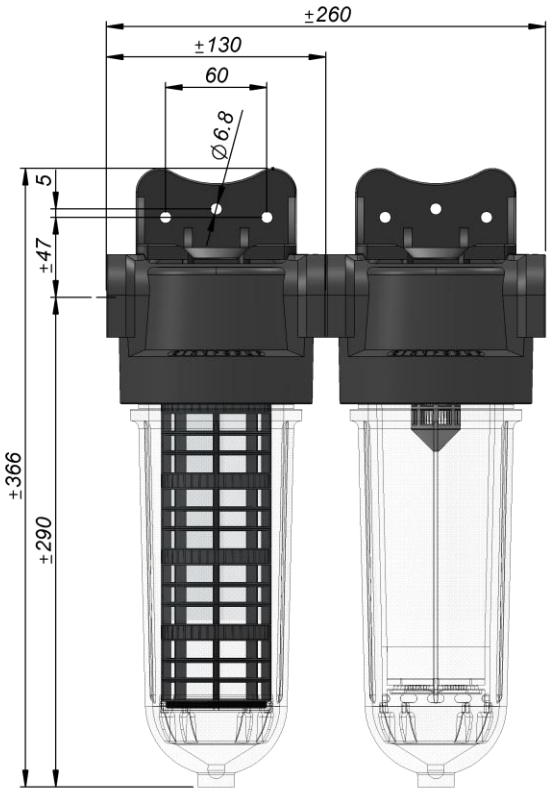

Airwatec SA | Hochstrasse 104d |4700 Eupen | Belgium
T.: +32 87 59 83 30 | F.: +32 87 59 84 40 | E.: info@airwatec.com
VAT/BTW BE 0464.530.129 | www.airwatec.com

Technical Datasheet

Filter type:	**SL240 TRIO-CTN**
Connection diameter:	3/4” or 1”
Average flow rate (m³/h):	1,8 at ΔP 0,8 bar
Working pressure (bar):	8
Max. operating pressure (bar):	12
Max. operating temperature (°C):	50
Weight (kg):	3,05 / 3,33 (with packaging)
Packaging in mm:	395 x 327 x 125
Filter head:	Polypropylene (PP)
Bowl:	SAN
Filtering support:	PP + 20% fiberglass
Seals:	O-ring butadiene-acrylonitrile (NBR)
Centrifugal vane + cap:	Polyethylene (PE)
Wrench:	ABS
Filtering sleeve:	Polyester (non-washable) or nylon (washable)
Filtration surface + capacity:	440 cm² with sleeve + 0,57L with activated carbon
CTN container for activated carbon:	SAN (body) 0,6 mm + PP with 20% fiberglass(cap) 0,3mm
Original equipment:	Filtering sleeve 100 µm + 25 µm, CTN filled with activated carbon, wrench, wall fixations in PP + 30% fiberglass
Filtering fineness available (µm): (packs of 5 sleeves)	Non-washable : 1 - 5 - 10 - 25 - 50 - 100 Washable : 150 - 300

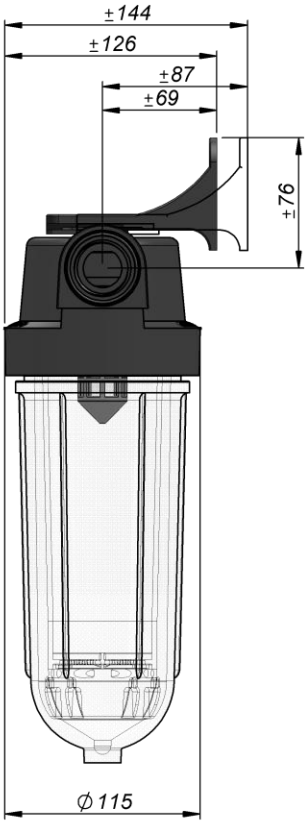

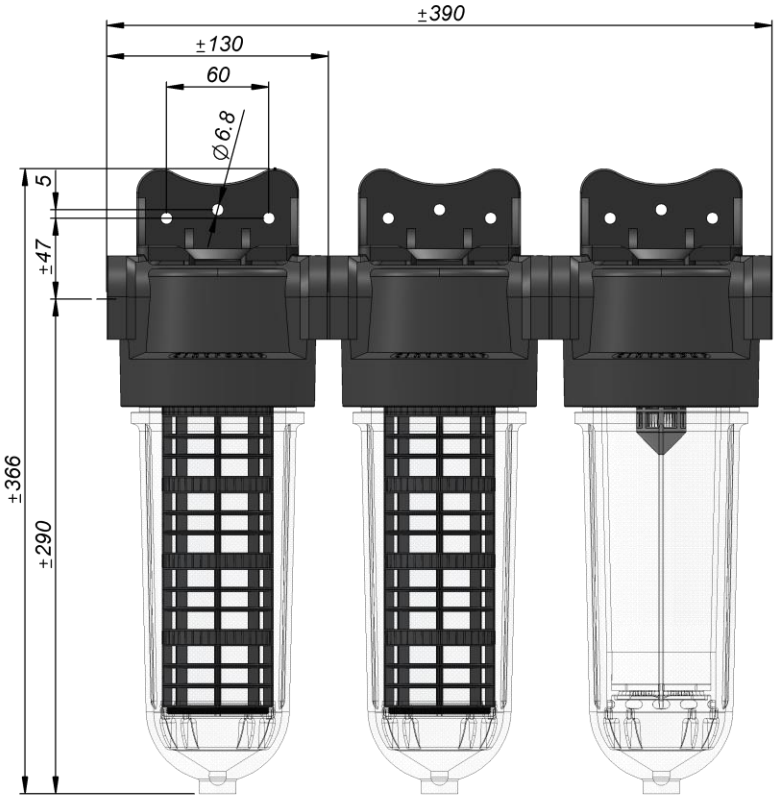

Airwatec SA | Hochstrasse 104d |4700 Eupen | Belgium
T.: +32 87 59 83 30 | F.: +32 87 59 84 40 | E.: info@airwatec.com
VAT/BTW BE 0464.530.129 | www.airwatec.com

Technical Datasheet

Filter type:	**NW18**
Connection diameter:	3/4”
Average flow rate (m³/h):	3,5 at ΔP 0,2 bar
Working pressure (bar):	10
Max. operating pressure (bar):	16
Max. operating temperature (°C):	50
Weight (kg):	1,1 / 1,5 (with packaging)
Packaging in mm:	251 x 155 x 136
Filter head:	Polypropylene (PP) + 20% fiberglass
Bowl:	SAN
Filtering support:	PP + 20 % fiberglass
Seals:	O-ring butadiene-acrylonitrile (NBR)
Centrifugal vane + cap:	Polyethylene (PE)
Drain screw:	Polyamide (PA) + polyester (2K)
Wrench:	ABS
Filtering sleeve:	Polyester
Filtration surface (cm²):	190
Original equipment:	Filtering sleeve 25 µm, wrench+ 2 connections ¾’’
Options:	Wall fixation in PP + 30% fiberglass, drain-cock ¼’’ made of nickel-plated brass and pressure gauges 1/8’’ made of brass
Filtering fineness available (µm): (packs of 5 sleeves)	Non-washable : 5 - 10 - 25 - 50 - 100

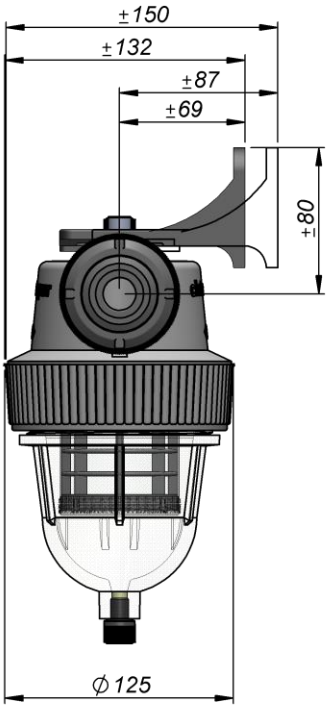

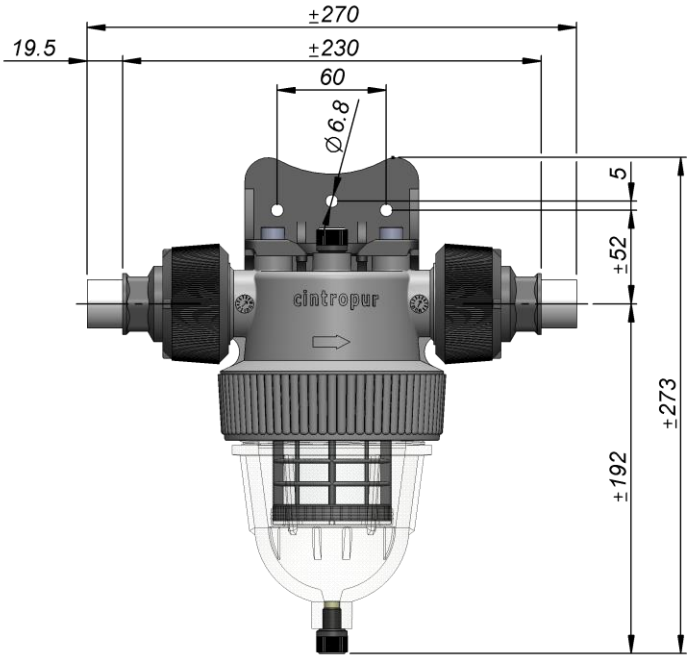

Airwatec SA | Hochstrasse 104d |4700 Eupen | Belgium
T.: +32 87 59 83 30 | F.: +32 87 59 84 40 | E.: info@airwatec.com
VAT/BTW BE 0464.530.129 | www.airwatec.com

Technical Datasheet

Filter type:	**NW25**
Connection diameter:	¾ ’’ or 1”
Average flow rate (m³/h):	5,5 at ΔP 0,2 bar
Working pressure (bar):	10
Max. operating pressure (bar):	16
Max. operating temperature (°C):	50
Weight (kg):	1,23 / 1,65 (with packaging)
Packaging in mm (L x W x H):	376 x 155 x 126
Filter head:	Polypropylene (PP) + 20% fiberglass
Bowl:	SAN
Wrench:	ABS
Seals:	O-ring butadiene-acrylonitrile (NBR)
Centrifugal vane + cap:	Polyethylene (PE)
Drain screw:	Polyamide (PA) + Polyester (2K)
Filtering support:	PP + 20% fiberglass
Filtering sleeve:	Polyester (non-washable) or nylon (washable)
Filtration surface (cm²):	450
Original equipment:	Filtering sleeve 25 µm, wrench, 2 connections ¾ ’’ or 1’’
Options:	Wall fixation in PP + 30% fiberglass, drain-cock ¼ ’’ made of nickel-plated brass and pressure gauges 1/8’’ made of brass
Filtering fineness available (µm): (packs of 5 sleeves)	Non-washable : 1 - 5 - 10 - 25 - 50 - 100 Washable : 150 - 300

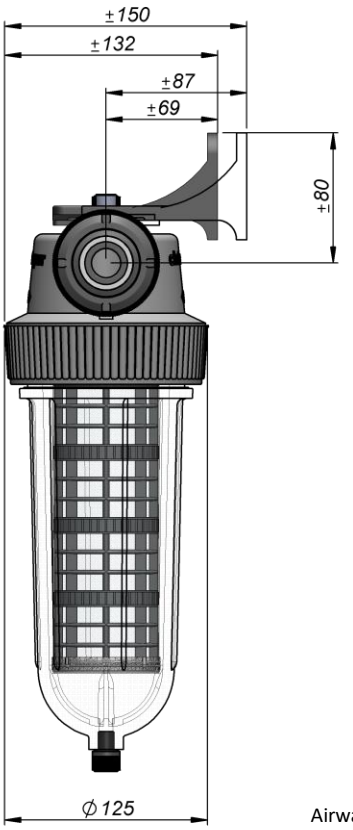

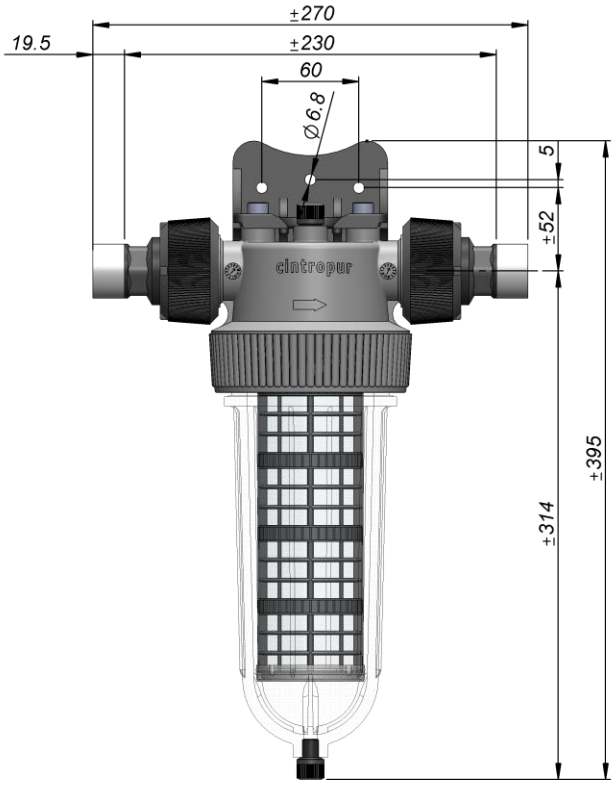

Technical Datasheet

Filter type:	**NW25 TE-CTN**
Connection diameter:	1”
Average flow rate (m³/h):	2,5 at ΔP 0,8 bar
Working pressure (bar):	10
Max. operating pressure (bar):	16
Max. operating temperature (°C):	50
Weight (kg):	1,3 / 1,8 (with packaging)
Packaging in mm (L x W x H):	376 x 155 x 126
Filter head:	Polypropylene (PP) + 20% fiberglass
Bowl:	SAN
Wrench:	ABS
Seals:	O-ring butadiene-acrylonitrile (NBR)
Drain screw:	Polyamide (PA) + Polyester (2K)
CTN container capacity (litres):	0,57
CTN container for activated carbon:	SAN (body) 0,6 mm + PP with 20% fiberglass(cap) 0,3mm
Original equipment:	empty CTN + wrench + 2 connections 1’’
Option:	Wall fixation in PP + 30% fiberglass

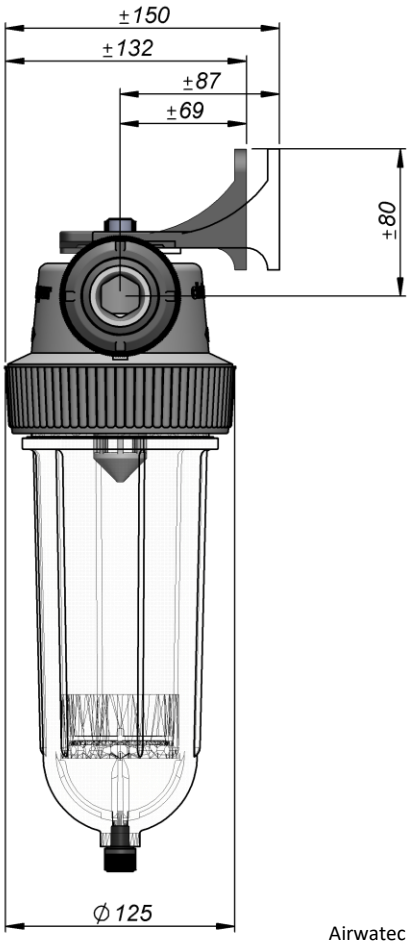

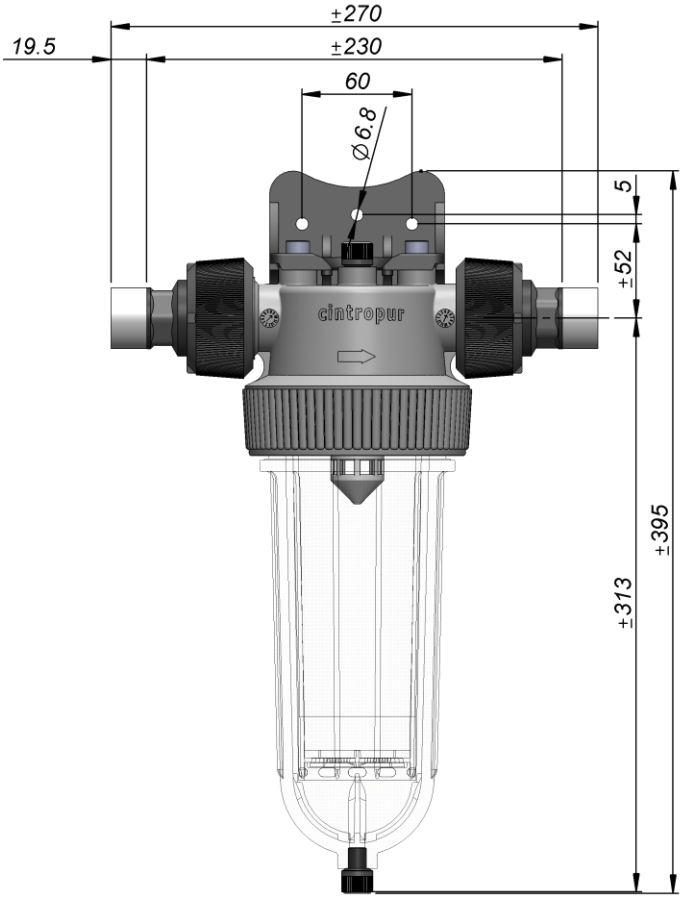

Technical Datasheet

Filter type:	**NW25 DUO-CTN**
Connection diameter:	¾ ” and 1”
Average flow rate(m³/h):	2,5 at ΔP 0,8 bar
Working pressure (bar):	10
Max. operating pressure (bar):	16
Max. operating temperature (°C):	50
Weight (kg):	3,2 / 3,7 (with packaging)
Packaging in mm:	370 x 325 x 126
Filter head:	Polypropylene (PP) + 20% fiberglass
Bowl:	SAN
Wrench:	ABS
Seals:	O-ring butadiene-acrylonitrile (NBR)
Centrifugal vane + cap:	Polyethylene (PE)
Drain screw:	Polyamide (PA) + Polyester (2K)
Filtering support:	PP + 20% fiberglass
Filtering sleeve:	Polyester (non-washable) or nylon (washable)
CTN container for activated carbon:	SAN (body) 0,6 mm + PP with 20% fiberglass(cap) 0,3mm
Filtration surface / capacity:	440 cm² with sleeve + 0,57 L activated carbon
Original equipment:	Sleeve 25 µm, CTN filled with activated carbon, 1 wrench, 2 wall fixations PP + 30% fiberglass + 2 connections ¾’’ + 2 connections 1’’
Options:	drain-cock ¼’’ made of nickel-plated brass, pressure gauges 1/8’’ made of brass
Filtering fineness available (µm): (packs of 5 sleeves)	Non-washable : 1 - 5 - 10 - 25 - 50 - 100 Washable : 150 - 300

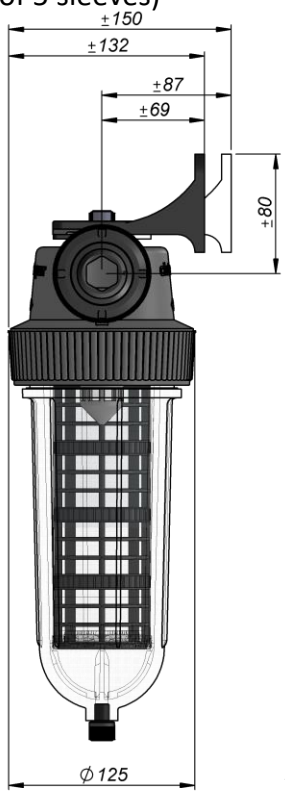

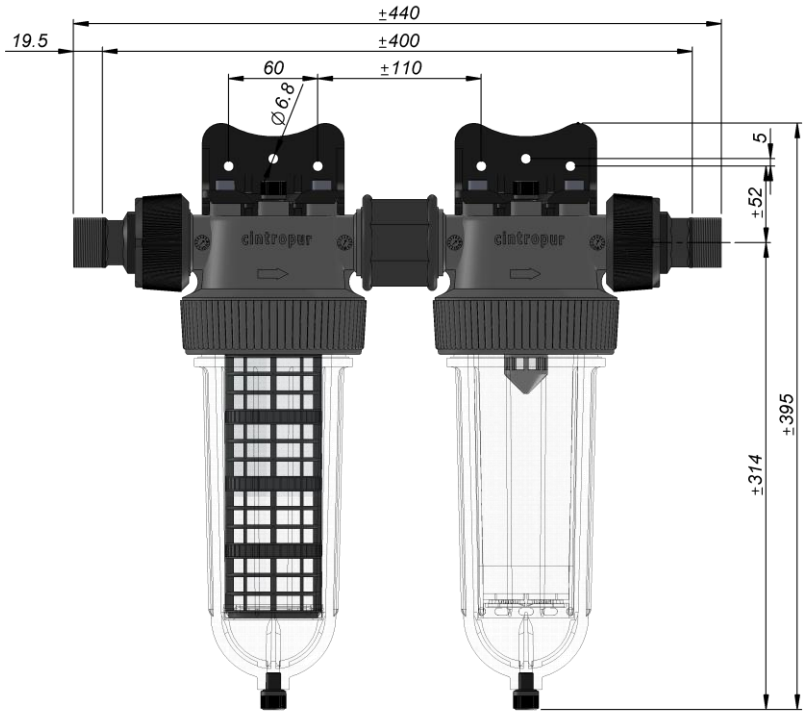

Technical Datasheet

Filter type:	**NW32**
Connection diameter:	1 ¼ ”
Average flow rate (m³/h):	6,5 at ΔP 0,2 bar
Working pressure (bar):	10
Max. operating pressure (bar):	16
Max. operating temperature (°C):	50
Weight (kg):	2,1 / 2,3 (with packaging)
Packaging in mm:	562 x 155 x 126
Filter head:	Polypropylene (PP) + 20% fiberglass
Bowl:	SAN
Wrench:	ABS
Filtering support:	PP + 20% fiberglass
Seals:	O-ring butadiene-acrylonitrile (NBR)
Centrifugal vane + cap:	Polyethylene (PE)
Drain screw:	Polyamide (PA) + Polyester (2K)
Filtering sleeve:	Polyester (non-washable) or nylon (washable)
Filtration surface (cm²):	840
Original equipment:	Filtering sleeve 25 µm, wrench, 2 connections 1 ¼’’
Options:	Wall fixation in PP + 30% fiberglass, drain-cock ¼ ’’ made of nickel-plated brass, pressure gauges 1/8’’ made of brass
Filtering fineness available (µm): (packs of 5 sleeves)	Non-washable : 1 - 5 - 10 - 25 - 50 - 100 Washable : 150 - 300

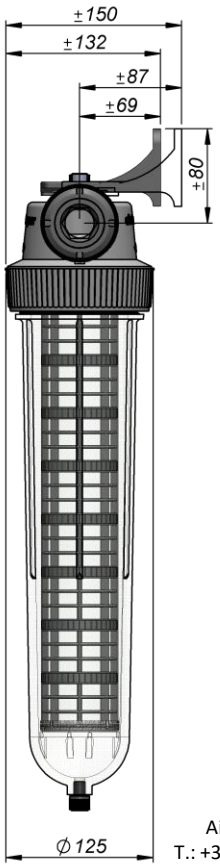

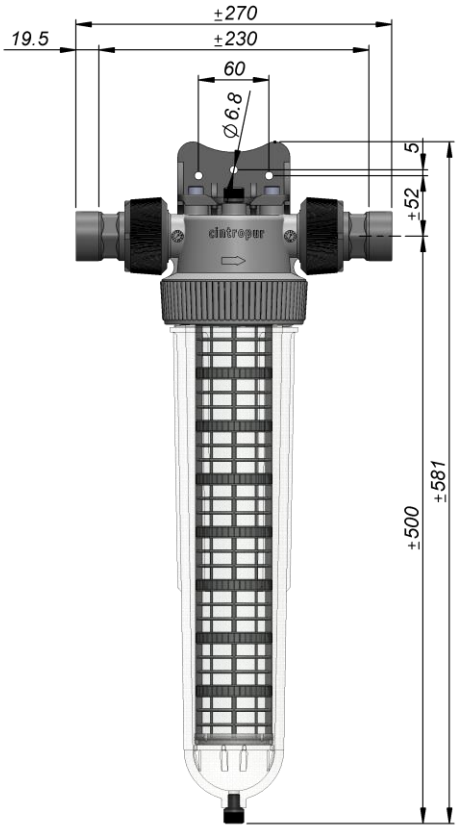

Technical Datasheet

Filter type:	**TIO**
Connection diameter:	1”
Average flow rate (m³/h):	2,2 at ΔP 0,8 bar
Working pressure (bar):	10
Max. operating pressure (bar):	16
Max. operating temperature (°C):	50
Weight (kg):	2,6 / 2,8 (with packaging)
Packaging in mm:	560 x 165 x 140
Filter head:	Polypropylene (PP) + 20% fiberglass
Bowl:	SAN
Wrench:	ABS
Filtering support:	PP + 20% fiberglass
Seals:	O-ring butadiene-acrylonitrile (NBR)
Centrifugal vane + cap:	Polyethylene (PE)
Drain screw:	Polyamide (PA) + Polyester (2K)
Filtering sleeve:	Polyester (non-washable) or nylon (washable)
Filtration surface (cm²):	335 (vol cartridge CTN 0.57l)
Original equipment:	Sleeve 25 µm, wrench, empty cartridge CTN, 2 connections 1 ¼’’
Options:	Wall fixation in PP + 30% fiberglass, drain-cock ¼ ’’ made of nickel-plated brass, pressure gauges 1/8’’ made of brass
Filtering fineness available (µm): (packs of 5 sleeves)	Non-washable : 1 - 5 - 10 - 25 - 50 - 100 Washable : 150 - 300

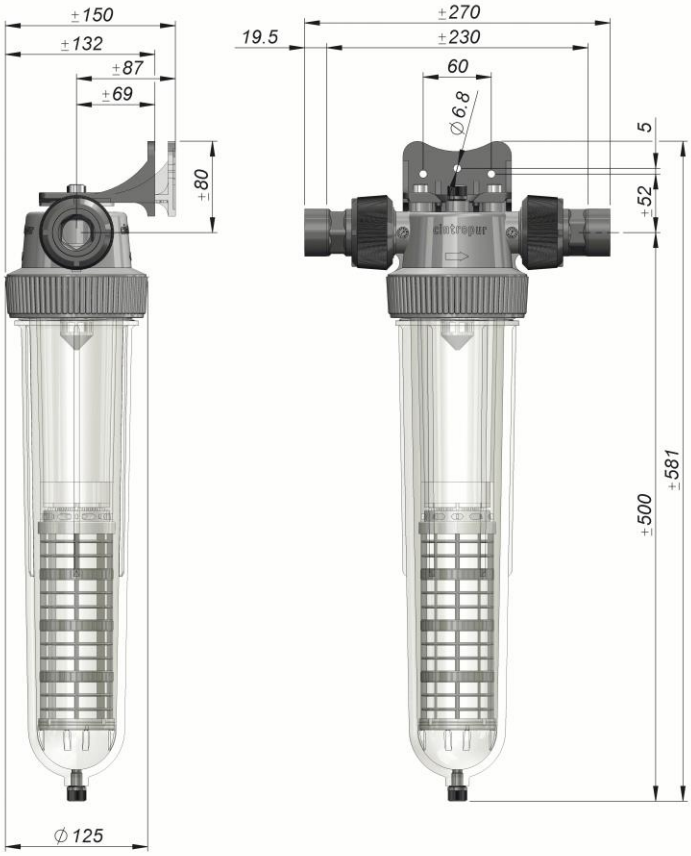

Airwatec SA | Hochstrasse 104d |4700 Eupen | Belgium
T.: +32 87 59 83 30 | F.: +32 87 59 84 40 | E.: info@airwatec.com
VAT/BTW BE 0464.530.129 | www.airwatec.com

Technical Datasheet

Filter type:	**NW32TE**
Connection diameter:	1 ¼ ”
Average flow rate (m³/h):	2,5 at ΔP 0,8 bar
Working pressure (bar):	10
Max. operating pressure (bar):	16
Max.operating temperature (°C):	50
Weight (kg):	2,1 / 2,4 (with packaging)
Packaging in mm:	562 x 155 x 126
Filter head:	Polypropylene (PP) + 20% fiberglass
Bowl:	SAN
Wrench:	ABS
Seals:	O-ring butadiene-acrylonitrile (NBR)
Drain screw:	Polyamide (PA) + Polyester (2K)
Bowl capacity (litres):	1,7
Tube + strainer:	Stainless steel sheet – inlet 1,1 mm & strainer – inlet 0,2 mm
Original equipment:	Tube + strainer, wrench + 2 connections 1 ¼’’
Option:	Wall fixation in PP + 30% fiberglass

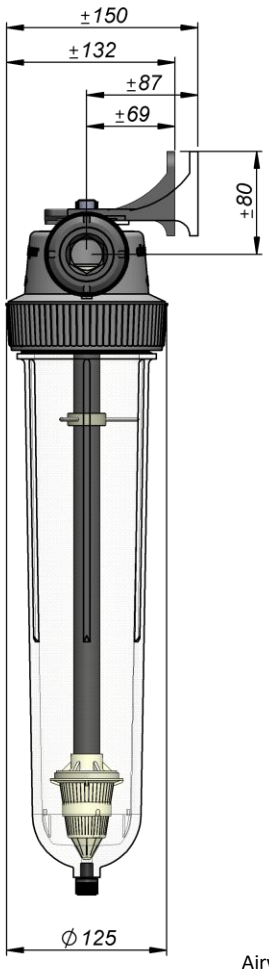

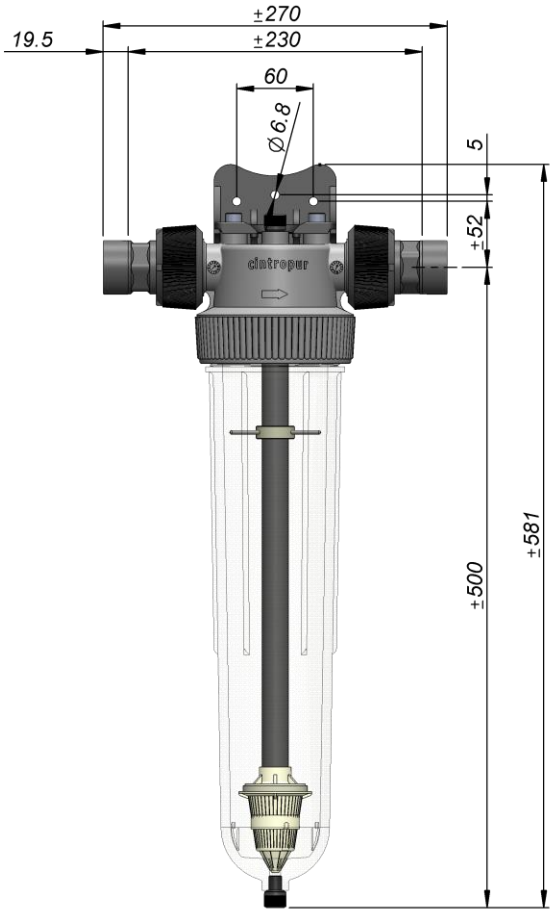

Airwatec SA | Hochstrasse 104d |4700 Eupen | Belgium
T.: +32 87 59 83 30 | F.: +32 87 59 84 40 | E.: info@airwatec.com
VAT/BTW BE 0464.530.129 | www.airwatec.com

Technical Datasheet

Filter type:	**NW280**
Connection diameter:	1’’
Average flow rate (m³/h):	7 at ΔP 0,2 bar
Working pressure (bar):	10
Max. operating pressure (bar):	16
Max. operating temperature (°C):	50
Weight (kg):	2,2 / 2,7 (with packaging)
Packaging in mm:	400 x 172 x 168
Filter head:	Polypropylene (PP) + 20% fiberglass
Connections + nuts:	PP + 20% fiberglass
Bowl:	PET
Wrench:	ABS
Filtering support:	PP + 20 % fiberglass
Seals:	O-ring butadiene-acrylonitrile (NBR)
Centrifugal vane + cap:	Polypropylene (PP) + elastomer (2K)
Air drain screw:	Polyamide (PA) + polyester (2K)
Filtering sleeve:	Polyester (non-washable) or nylon (washable)
Filtration surface (cm²):	530
Original equipment:	Filtering sleeve 25 µm, wrench, drain-cock ½ ” nickel-plated brass, 2 pressure gauges with glycerine 0-20 bar ¼’’ brass + 2 connections 1’’
Option:	Stainless steel wall fixation 2 mm
Filtering fineness available (µm):	Non-washable : 1 - 5 - 10 - 25 - 50 - 100
(packs of 5 sleeves)	Washable : 150 - 300

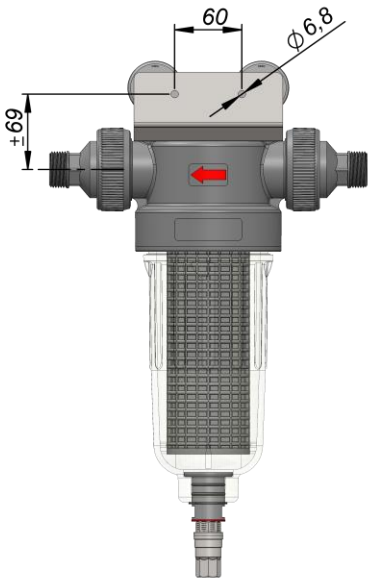

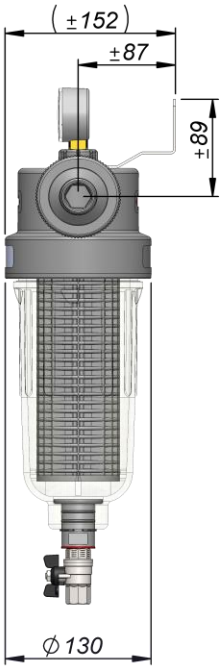

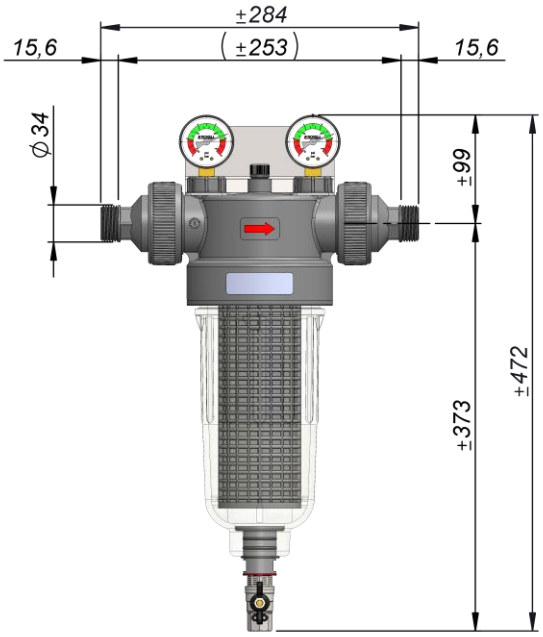

Technical Datasheet

Filter type:	**NW280-CTN**
Connection diameter:	1 ”
Average flow rate (m³/h):	3,5 at ΔP 0,8 bar
Working pressure (bar):	10
Max. operating pressure (bar):	16
Max.operating temperature (°C):	50
Weight (kg):	2 / 2,5 (with packaging)
Packaging in mm:	400 x 172 x 168
Filter head:	Polypropylene (PP) + 20% fiberglass
Connections:	PA
Nuts:	PP + 20% fiberglass
Bowl:	PET
Wrench:	ABS
Bowl capacity (litres):	0,78
CTN cartridge for AC	SAN (body) 600µm+ PP glass fibre (cover) 300µm
Seals:	O-ring butadiene-acrylonitrile (NBR)
Air drain screw:	Polyamide (PA) + polyester (2K)
Original equipment:	CTN empty + key + 2 1’’ fittings
	2 ¼’’ stainless steel plugs in place of pressure gauges
Option:	Stainless steel wall fixation 2 mm

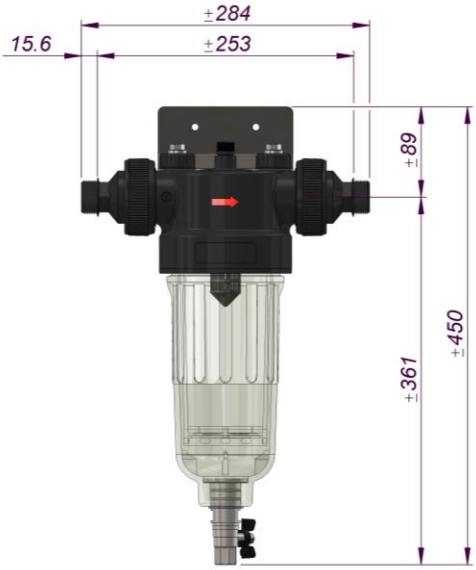

Technical Datasheet

Filter type:	**NW340**
Connection diameter:	1 ¼''
Average flow rate (m³/h):	10 at ΔP 0,2 bar
Working pressure (bar):	10
Max. operating pressure (bar):	16
Max. operating temperature (°C):	50
Weight (kg):	2,66 / 3,18 (with packaging)
Packaging in mm:	535 x 172 x 168
Filter head:	Polypropylene (PP) + 20% fiberglass
Connections:	PA
Nuts:	PP + 20% fiberglass
Bowl:	PET
Wrench:	ABS
Filtering support:	PP + 20% fiberglass
Seals:	O-ring butadiene-acrylonitrile (NBR)
Centrifugal vane + cap:	Polypropylene (PP) + elastomer (2K)
Air drain screw:	Polyamide (PA) + polyester (2K)
Filtering sleeve:	Polyester (non-washable) or nylon (washable)
Filtration surface (cm²):	770
Original equipment:	Filtering sleeve 25 µm, wrench, drain-cock ½ " nickel-plated brass, 2 pressure gauges with glycerine 0-20 bar ¼ '' brass + 2 connections 1 ¼''
Option:	Stainless steel wall fixation 2 mm
Filtering fineness available (µm): (packs of 5 sleeves)	Non-washable : 1 - 5 - 10 - 25 - 50 - 100 Washable : 150 - 300

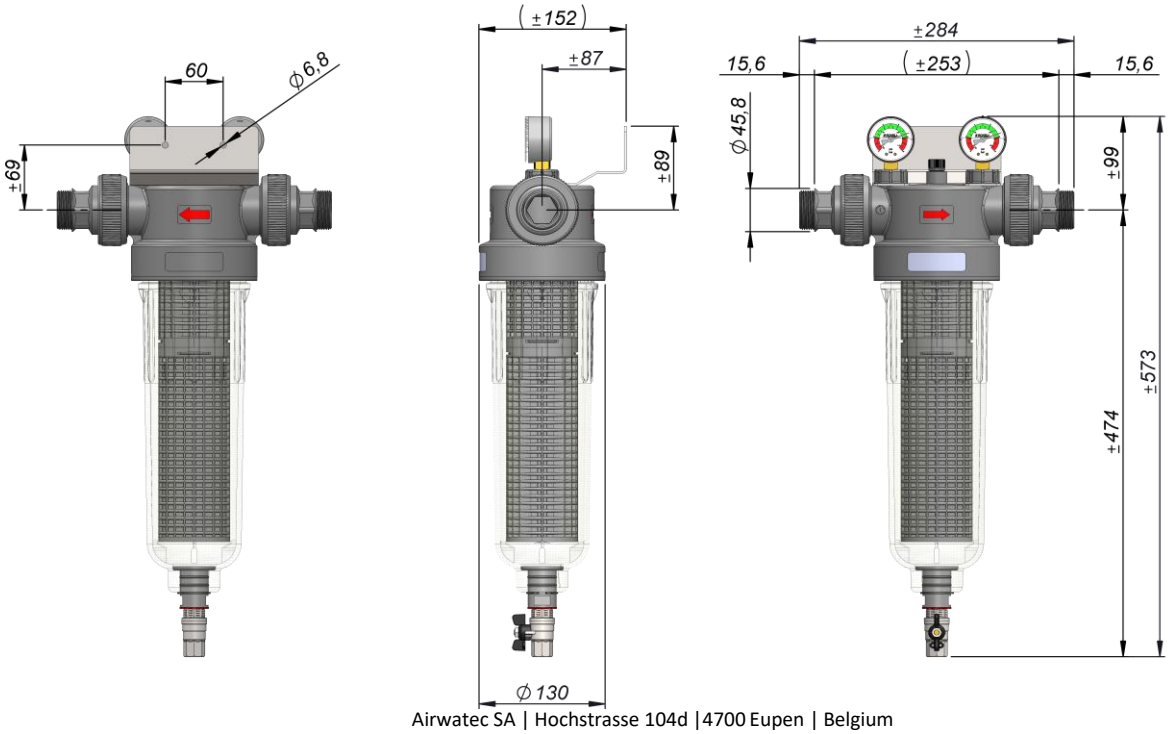

Airwatec SA | Hochstrasse 104d |4700 Eupen | Belgium
T.: +32 87 59 83 30 | F.: +32 87 59 84 40 | E.: info@airwatec.com
VAT/BTW BE 0464.530.129 | www.airwatec.com

Technical Datasheet

Filter type:	**NW400**
Connection diameter:	1 ½''
Average flow rate (m³/h):	12 at ΔP 0,2 bar
Working pressure (bar):	10
Max. operating pressure (bar):	16
Max. operating temperature (°C):	50
Weight (kg):	2,88 / 3,47 (with packaging)
Packaging in mm:	645 x 172 x 168
Filter head:	Polypropylene (PP) + 20% fiberglass
Connections:	PA
Nuts:	PP + 20% fiberglass
Bowl:	PET
Wrench:	ABS
Filtering support:	PP + 20% fiberglass
Seals:	O-ring butadiene-acrylonitrile (NBR)
Centrifugal vane + cap:	Polypropylene (PP) + elastomer (2K)
Air drain screw:	Polyamide (PA) + polyester (2K)
Filtering sleeve:	Polyester (non-washable) or nylon (washable)
Filtration surface (cm²):	1010
Original equipment:	Filtering sleeve 25 µm, wrench, drain-cock ½ " nickel-plated brass, 2 pressure gauges with glycerine 0-20 bar ¼ '' brass + 2 connections 1 ½''
Option:	Stainless steel wall fixation 2 mm
Filtering fineness available (µm): (packs of 5 sleeves)	Non-washable : 1 - 5 - 10 - 25 - 50 - 100 Washable : 150 - 300

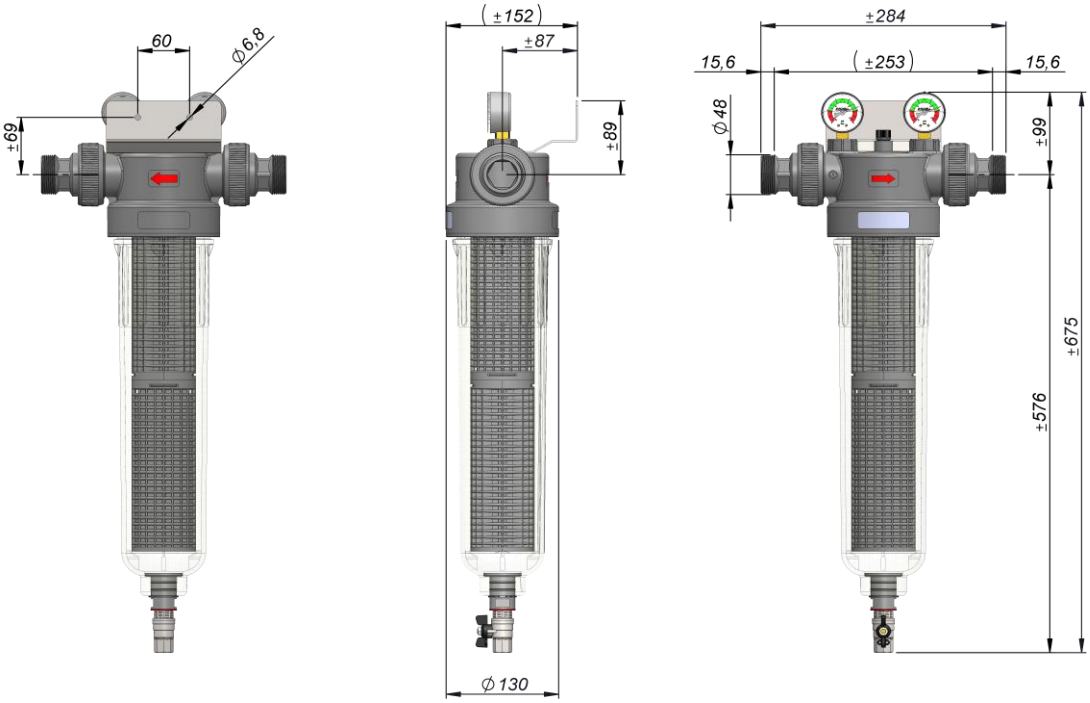

Airwatec SA | Hochstrasse 104d |4700 Eupen | Belgium
T.: +32 87 59 83 30 | F.: +32 87 59 84 40 | E.: info@airwatec.com
VAT/BTW BE 0464.530.129 | www.airwatec.com

Technical Datasheet

Filter type:	**NW500**
Connexion diameter:	2’’
Average flow rate (m³/h):	18 at ΔP 0,2 bar
Working pressure (bar):	10
Max. operating pressure (bar):	16
Max. operating temperature (°C):	50
Weight (kg):	6,4 / 8 (with packaging)
Packaging in mm:	760 x 315 x 227
Air drain screw:	Polyamide (PA) + polyester (2K)
Filter head:	Polypropylene (PP) + 20% fiberglass
Bowl:	SAN
Wrench:	ABS
Connections:	PA
Nuts:	PP + 20% fiberglass
Seals:	O-ring butadiene-acrylonitrile (NBR)
Centrifugal vane + cap :	Polypropylene (PP) + 20% fiberglass + elastomer (2K)
Filtering support:	PP + 20% fiberglass
Valve adapter:	PA
Filtering sleeve:	Polyester (non-washable) or nylon (washable)
Filtration surface (cm²):	1288
Original equipment:	Filtering sleeve 25 µm, wrench, drain-cock ¾ ” nickel-plated brass, 2 pressure gauges with glycerine 0-20 bar ¼ ’’ brass + 2 connections 2’’
Option:	Stainless steel wall fixation 3 mm
Filtering fineness available (µm): (packs of 5 sleeves)	Non-washable : 1 - 5 - 10 - 25 - 50 - 100 Washable : 150 - 300

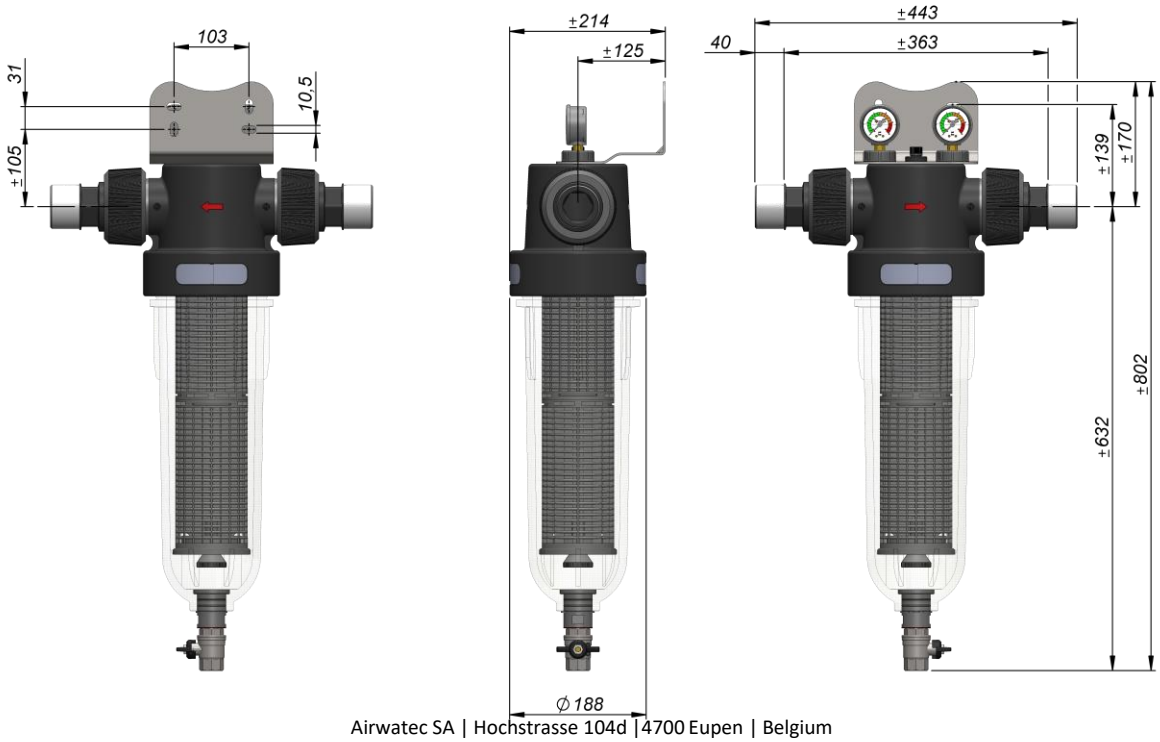

Airwatec SA | Hochstrasse 104d |4700 Eupen | Belgium
T.: +32 87 59 83 30 | F.: +32 87 59 84 40 | E.: info@airwatec.com
VAT/BTW BE 0464.530.129 | www.airwatec.com

Technical Datasheet

Filter type:	**NW650**
Connection diameter:	2 ½ ’’
Average flow rate (m³/h):	25 at ΔP 0,2 bar
Working pressure (bar):	10
Max. operating pressure (bar):	16
Max. operating temperature (°C):	50
Weight (kg):	7 / 8,6 (with packaging)
Packaging in mm (L x W x H):	760 x 315 x 227
Air drain screw:	Polyamide (PA) + polyester (2K)
Filter head:	Polypropylene (PP) + fiberglass
Bowl:	SAN
Wrench:	ABS
Collar:	PA
Flanges:	PP + 30% fiberglass
Seals:	O-ring butadiene-acrylonitrile (NBR)
Centrifugal vane + cap:	Polypropylene (PP) + 20% fiberglass + elastomer (2K)
Filtering support:	PP + 20% fiberglass
Valve adaptor:	PA
Filtering sleeve:	Polyester (non-washable) or nylon (washable)
Filtration surface (cm²):	1288
Original equipment:	Filtering sleeve 25 µm, wrench, drain-cock ¾ ” nickel-plated brass, 2 pressure gauges with glycerine 0-20 bar ¼ ’’ brass + 2 loose flanges 2 ½’’
Option:	Stainless steel wall fixation 3mm
Filtering fineness available (µm): (packs of 5 sleeves)	Non-washable : 1 - 5 - 10 - 25 - 50 - 100 Washable : 150 - 300

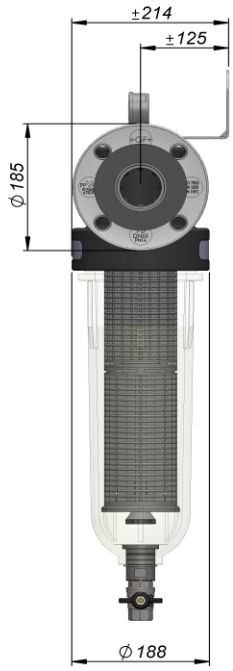

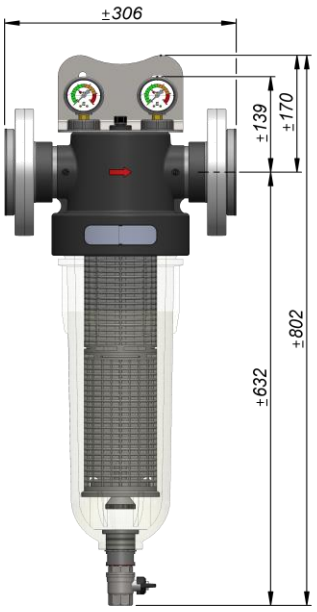

Airwatec SA | Hochstrasse 104d |4700 Eupen | Belgium
T.: +32 87 59 83 30 | F.: +32 87 59 84 40 | E.: info@airwatec.com
VAT/BTW BE 0464.530.129 | www.airwatec.com

Technical Datasheet

Filter type:	**NW800**
Connection diameter:	3’’
Average flow rate (m³/h):	32 at ΔP 0,2 bar
Working pressure (bar):	10
Max. operating pressure (bar):	16
Max. operating temperature (°C):	50
Weight (kg):	7,4 / 9 (with packaging)
Packaging in mm:	760 x 315 x 227
Air drain screw:	Polyamide (PA) + polyester (2K)
Filter head:	Polypropylene (PP) + 20% fiberglass
Bowl:	SAN
Wrench:	ABS
Collar:	PA
Flanges:	PP + 30% fiberglass
Seals:	O-ring butadiene-acrylonitrile (NBR)
Centrifugal vane + cap:	Polypropylene (PP) + 20% fiberglass + elastomer (2K)
Filtering support:	PP + 20% fiberglass
Valve adaptor :	PA
Filtering sleeve:	Polyester (non-washable) or nylon (washable)
Filtration surface (cm²):	1288
Original equipment:	Filtering sleeve 25 µm, wrench, drain-cock ¾ ” nickel-plated brass, 2 pressure gauges with glycerine 0-20 bar ¼ ’’ brass + 2 loose flanges 3’’
Option:	Stainless steel wall fixation 3 mm
Filtering fineness available (µm): (packs of 5 sleeves)	Non-washable : 1 - 5 - 10 - 25 - 50 - 100 Washable : 150 - 300

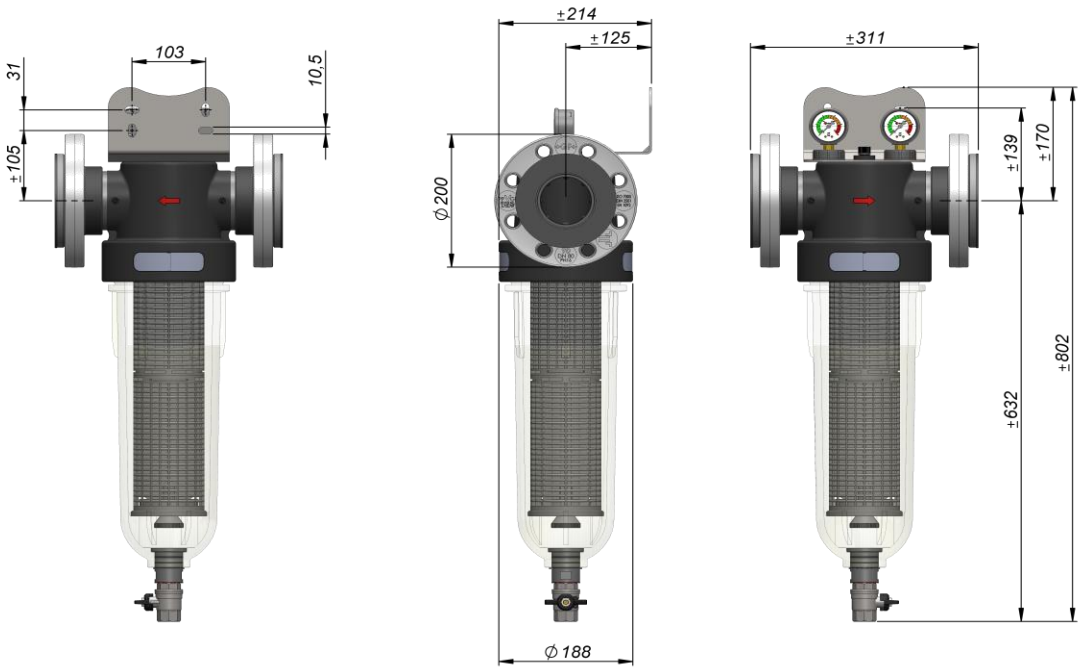

Airwatec SA | Hochstrasse 104d |4700 Eupen | Belgium
T.: +32 87 59 83 30 | F.: +32 87 59 84 40 | E.: info@airwatec.com
VAT/BTW BE 0464.530.129 | www.airwatec.com

Technical Datasheet

Filter type:	**NW500TE**
Connection diameter:	2’’
Average flow rate (m³/h):	5 at ΔP 0,8 bar
Working pressure (bar):	10
Max. operating pressure (bar):	16
Max. operating temperature (°C):	50
Weight (kg):	5,6 / 7,2 (with packaging)
Packaging in mm:	760 x 315 x 227
Air drain screw:	Polyamide (PA) + polyester (2K)
Filter head:	Polypropylene (PP) + 20% fiberglass
Bowl:	SAN
Wrench:	ABS
Connections:	PA
Nuts:	PP + 20% fiberglass
Seals:	O-ring butadiene-acrylonitrile (NBR)
Valve adaptor:	PA
Bowl capacity (litres):	4,85
Tube + strainer:	Perforated plate – inlet 1,1 mm & strainer – inlet 0,5 mm
Original equipment:	Tube + strainer, wrench, 2 connections 2’’
Option:	Stainless steel wall fixation 3 mm

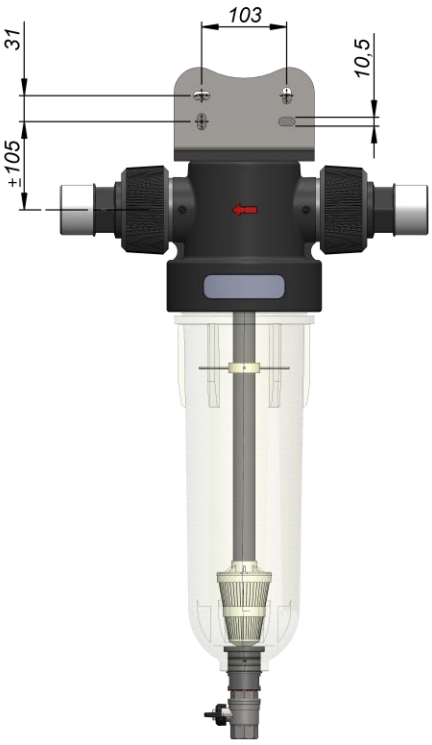

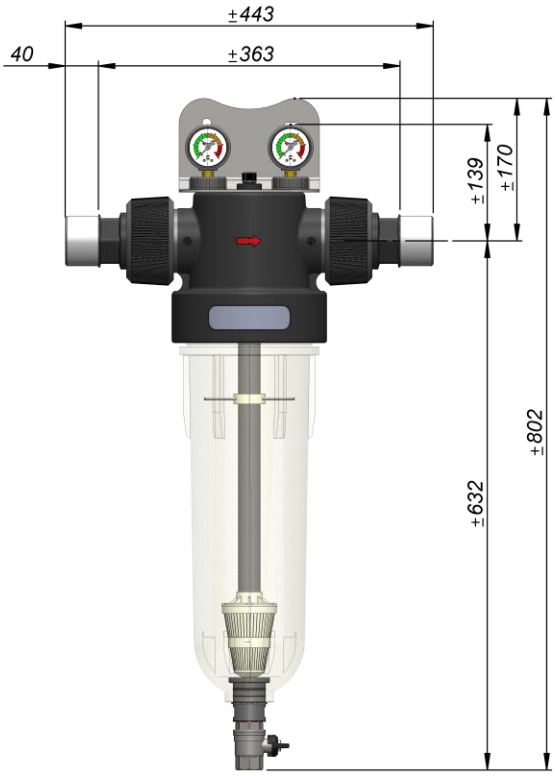

Airwatec SA | Hochstrasse 104d |4700 Eupen | Belgium
T.: +32 87 59 83 30 | F.: +32 87 59 84 40 | E.: info@airwatec.com
VAT/BTW BE 0464.530.129 | www.airwatec.com

Technical Datasheet

Filter type:	**UV 2100**
Connection diameter:	¾ ” and 1”
Advised flow (m³/h) at 25 mJ/cm²:	1,7
Advised flow (m³/h) at 40 mJ/cm²:	1,1
Working pressure (bar):	10
Max. operating pressure (bar):	16
Max. operating temperature (°C):	50
Weight (kg):	2,24 / 2,98 (with packaging)
Packaging in mm:	521 x 258 x 141
Filter head / bowl :	Polypropylene (PP) + 20% fiberglass
Wrench:	ABS
Seal bowl/head:	O-ring butadiene-acrylonitrile (NBR)
Drain screw (under UV):	PVDF
UV-C lamp:	25W with security micro-switch
UV treatment chamber:	316 L stainless steel
Original equipment:	1 UV-C 25W lamp, 1 wrench, 1 stainless steel wall fixation + 2 connections ¾’’ + 2 connections 1’’ + + time label 12m. below 22°C

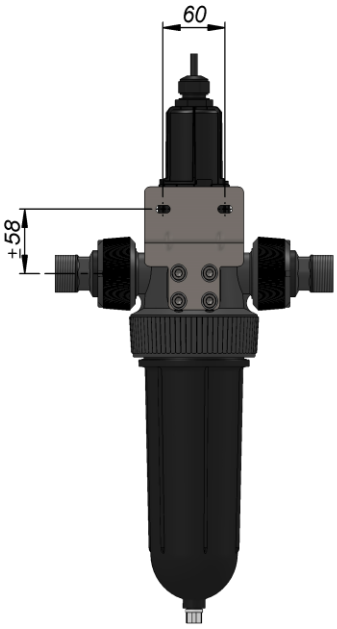

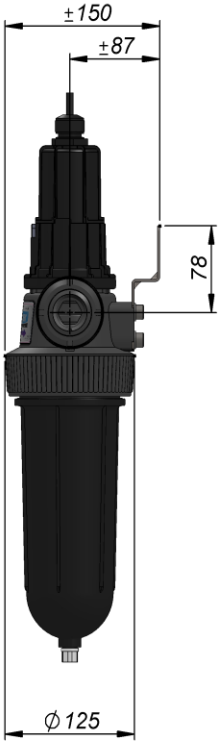

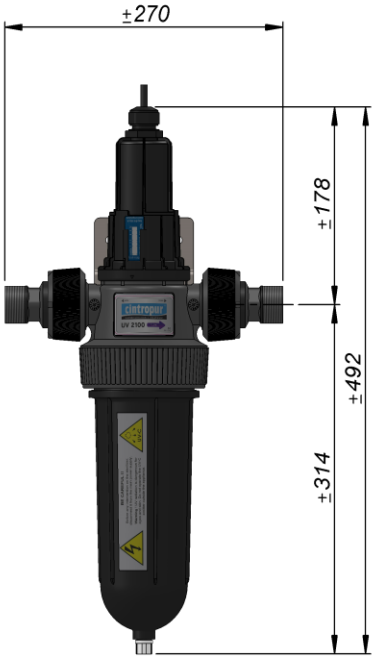

Technical Datasheet

Filter type:	**UV 4100**
Connection diameter:	¾ ” and 1”
Advised flow (m³/h) at 25 mJ/cm²:	2,1
Advised flow (m³/h) at 40 mJ/cm²:	1,3
Working pressure(bar):	10
Max. operating pressure (bar):	16
Max. operating temperature (°C):	50
Weight (kg):	2,24 / 2,98 (with packaging)
Packaging in mm:	521 x 258 x 141
Filter head / bowl :	Polypropylene (PP) + 20% fiberglass
Wrench:	ABS
Seal bowl/head:	O-ring butadiene-acrylonitrile (NBR)
Drain screw under UV:	PVDF
UV-C lamp:	40W with security micro-switch
UV treatment chamber:	316 L stainless steel
Original equipment:	1 UV-C 40W lamp, 1 wrench, 1 stainless steel wall fixation + 2 connections ¾’’ + 2 connections 1’’ time label 12m. below 22°C

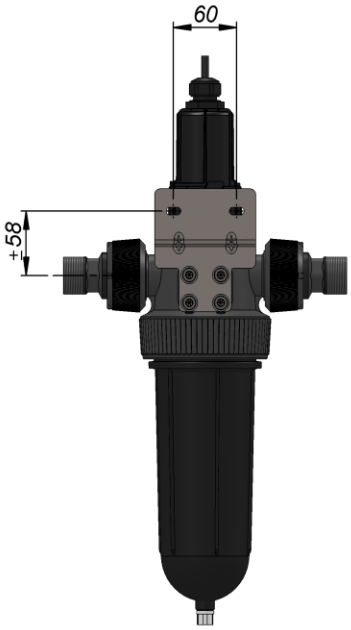

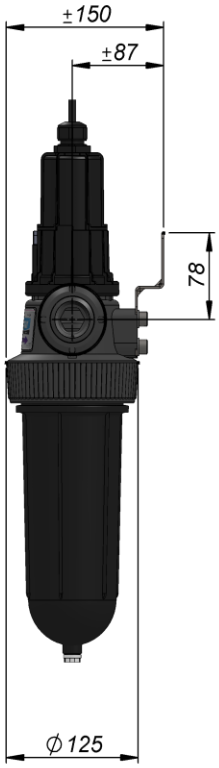

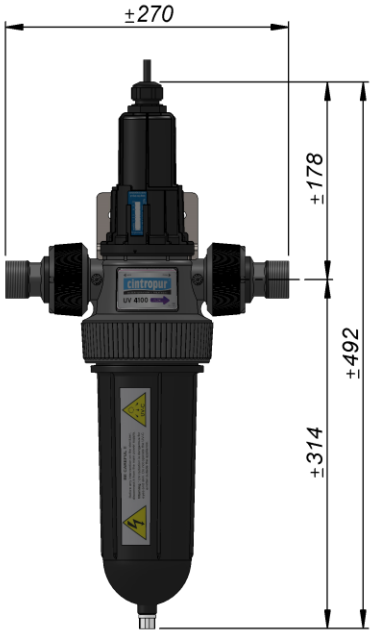

Technical Datasheet

Filter type:	**UV 6100**
Connection diameter:	1"
Advised flow (m³/h) at 25 mJ/cm²:	5,50
Advised flow (m³/h) at 40 mJ/cm²:	3,44
Working pressure(bar):	10
Max. operating pressure (bar):	16
Max. operating temperature (°C):	50
Weight (kg):	5,8 / 7,9 (with packaging)
Packaging in mm:	650 x 178 x 175 / 608 x 411 x 230
Filter head / bowl :	Polypropylene (PP) + 20% fiberglass
Wrench:	ABS
Seal bowl/head:	O-ring butadiene-acrylonitrile (NBR)
UV-C lamp:	60W with security micro-switch
UV treatment chamber:	316 L stainless steel
Original equipment:	1 ballast without display, 1 UV-C 60W lamp, 1 time label 24 months, 1 key, 1 stainless steel wall bracket, 1 ½'' drain valve, 2 1' fittings.

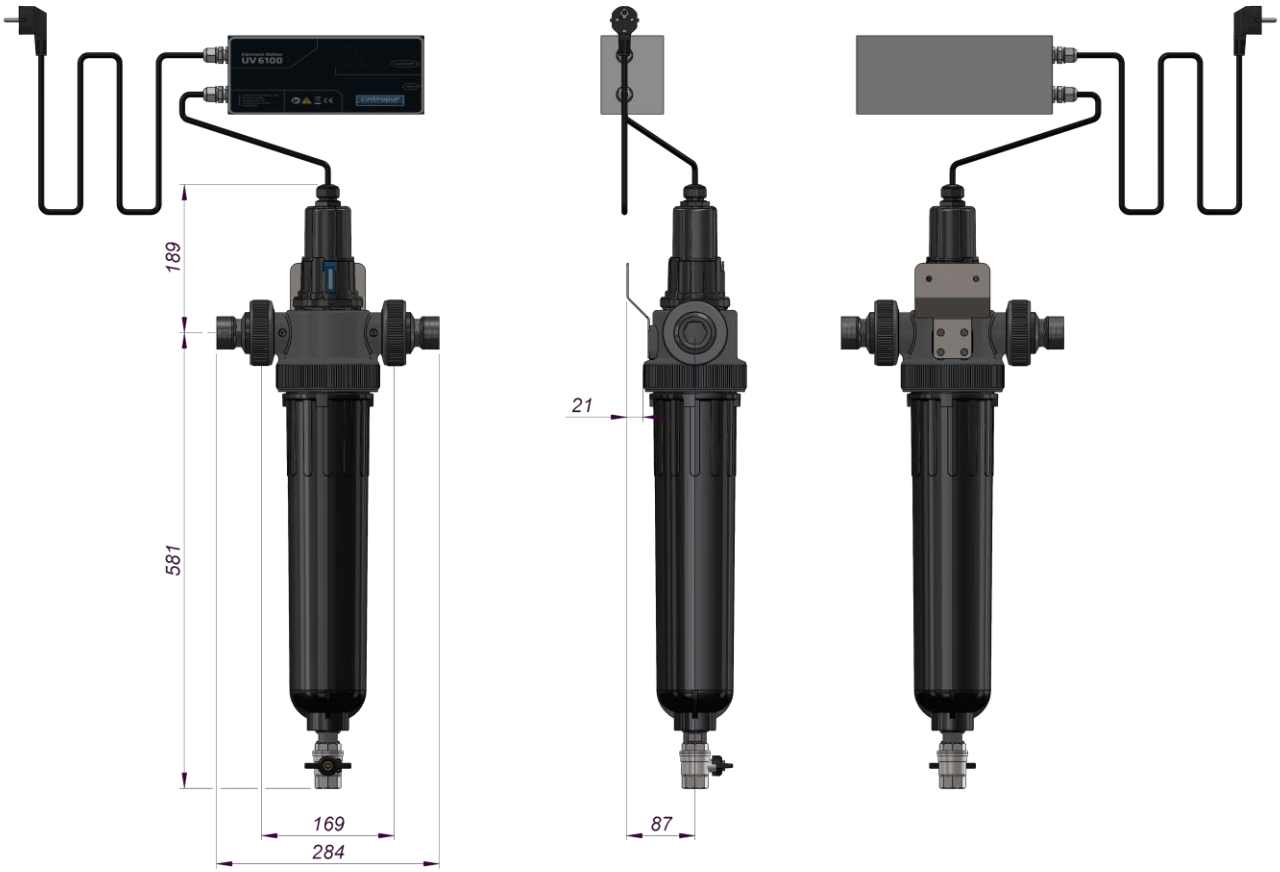

Airwatec SA | Hochstrasse 104d |4700 Eupen | Belgium
T.: +32 87 59 83 30 | F.: +32 87 59 84 40 | E.: info@airwatec.com
VAT/BTW BE 0464.530.129 | www.airwatec.com

Technical Datasheet

Filter type:	**UV 10100**
Connection diameter:	2"
Advised flow (m³/h) at 25 mJ/cm²:	6,79
Advised flow (m³/h) at 40 mJ/cm²:	4,25
Working pressure(bar):	10
Max. operating pressure (bar):	16
Max. operating temperature (°C):	50
Weight (kg):	10,36 / 13,38 (with packaging)
Packaging in mm:	759 x 317 x 237 / 605 x 415 x 230
Filter head / bowl :	Polypropylene (PP) + 20% fiberglass
Wrench:	ABS
Seal bowl/head:	O-ring butadiene-acrylonitrile (NBR)
UV-C lamp:	95W with security micro-switch
UV treatment chamber:	316 L stainless steel
Original equipment:	1 ballast with display, 1 UV-C 95W lamp, 1 time label 24 months, 1 key, 1 stainless steel wall bracket, 1 drain valve ¾", 2 2" fittings.

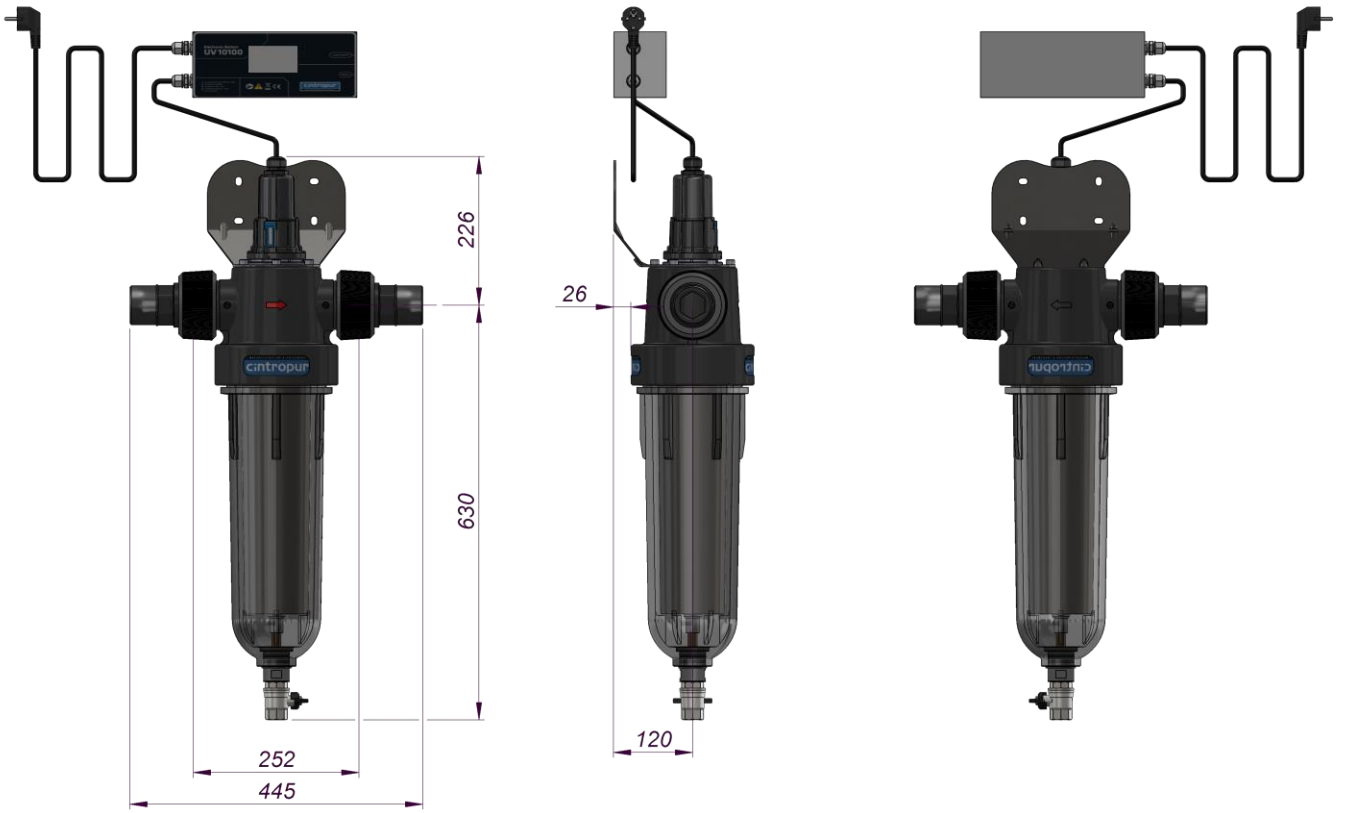

Airwatec SA | Hochstrasse 104d |4700 Eupen | Belgium
T.: +32 87 59 83 30 | F.: +32 87 59 84 40 | E.: info@airwatec.com
VAT/BTW BE 0464.530.129 | www.airwatec.com

Technical Datasheet

Filter type:	**DUO-UV**
Connection diameter:	¾ ” and 1”
Advised flow (m³/h) at 25 mJ/cm²:	1,7
Advised flow (m³/h) at 40 mJ/cm²:	1,1
Working pressure (bar):	10
Max. operating pressure (bar):	16
Max. operating temperature (°C):	50
Weight (kg):	3,05 / 4,70 (with packaging)
Packaging in mm:	521 x 466 x 141
Filter head:	Polypropylene (PP) + 20% fiberglass
Bowls:	SAN (transparent), PP (black coloured)
Wrench:	ABS
Bowl seals:	O-ring butadiene-acrylonitrile (NBR)
Centrifugal vane + cap:	Polyethylene (PE)
Air drain screw:	Polyamide (PA) + Polyester (2K)
Drain screw under UV:	PVDF
Filtering support:	PP + 20% fiberglass
Filtering sleeve:	Polyester (non-washable) or nylon (washable)
Filtration surface:	440 cm² with screen
UV-C lamp:	25W with security micro-switch
UV treatment chamber:	316 L stainless steel
Original equipment:	Filtering sleeve 25 µm, 1 UV-C 25W lamp, 1 wrench, 1 stainless steel wall fixation + 1 wall fixation made of PP + 2 connections ¾’’ + 2 connections 1’’ + time label 12m. below 22°C
Options:	drain cock ¼’’ nickel-plated brass, brass gauges 1/8’’
Filtering fineness available (µm): (packs of 5 sleeves)	Non-washable : 1 - 5 - 10 - 25 - 50 - 100 Washable : 150 - 300

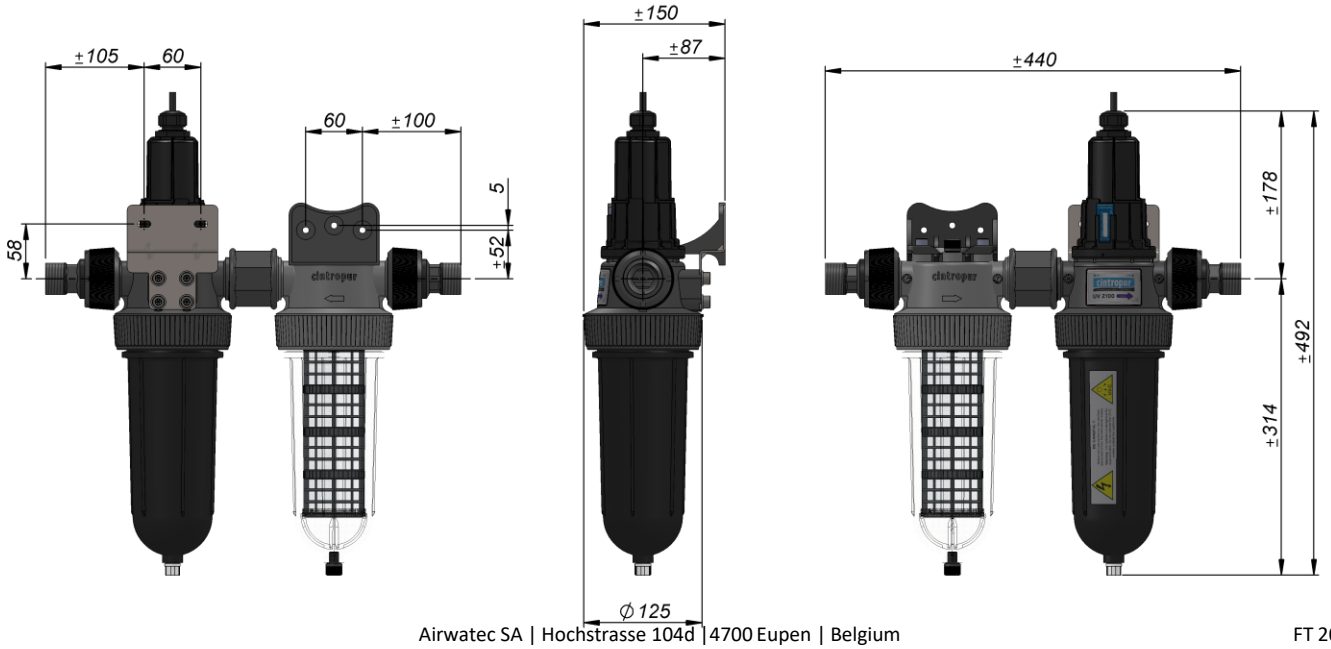

Airwatec SA | Hochstrasse 104d | 4700 Eupen | Belgium
T.: +32 87 59 83 30 | F.: +32 87 59 84 40 | E.: info@airwatec.com
VAT/BTW BE 0464.530.129 | www.airwatec.com

Technical Datasheet

Filter type:	**TRIO-UV 25W**
Connection diameter:	¾ ” and 1”
Advised flow (m³/h) at 25 mJ/cm²:	2
Advised flow (m³/h) at 40 mJ/cm²:	1,3
Working pressure (bar):	10
Max. operating pressure (bar):	16
Max. operating temperature (°C):	50
Weight (kg):	4,85 / 6,25 (with packaging)
Packaging in mm:	521 x 466 x 141
Filter head:	Polypropylene (PP) + 20% fiberglass
Bowls:	SAN (transparent), PP (black coloured)
Wrench:	ABS
Bowl seals:	O-ring butadiene-acrylonitrile (NBR)
Centrifugal vane + cap :	Polyethylene (PE)
Air drain screw:	Polyamide (PA) + Polyester (2K)
Drain screw under UV :	PVDF
Filtering support:	PP + 20% fiberglass
Filtering sleeve:	Polyester (non-washable) or nylon (washable)
CTN container for activated carbon:	SAN (body) 0,6 mm + PP with 20% fiberglass(cap) 0,3mm
Filtration surface / volume:	440 cm² with screen + 0,57 L activated carbon
UV-C lamp:	25W with security micro-switch
UV treatment chamber:	316L stainless steel
Original equipment:	Filtering sleeve 25 µm, CTN filled with activated carbon, 1UV-C 25W lamp, 1 wrench, 2 wall fixations made of PP + 30% fiberglass + 1 stainless steel wall fixation + 2 connections ¾’’ + 2 connections 1’’ + time label 12m. below 22°C
Options:	drain cock ¼’’ nickel-plated brass, brass gauges 1/8’’
Filtering fineness available (µm):	Non-washable : 1 - 5 - 10 - 25 - 50 - 100
(packs of 5 sleeves):	Washable : 150 - 300

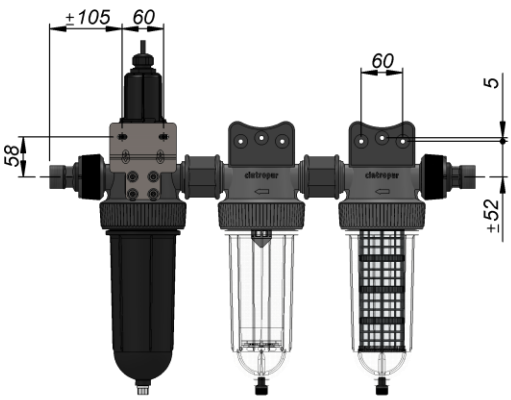

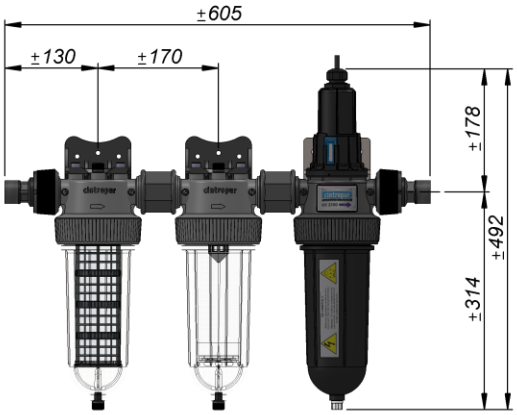

Airwatec SA | Hochstrasse 104d |4700 Eupen | Belgium
T.: +32 87 59 83 30 | F.: +32 87 59 84 40 | E.: info@airwatec.com
VAT/BTW BE 0464.530.129 | www.airwatec.com

Technical Datasheet

Filter type:	**TRIO-UV 40W**
Connection diameter:	¾ ” and 1”
Advised flow (m³/h) at 25 mJ/cm²:	2,6
Advised flow (m³/h) at 40 mJ/cm²:	1,6
Working pressure (bar):	10
Max. operating pressure (bar):	16
Max. operating temperature (°C):	50
Weight (kg):	4,85 / 6,25 (with packaging)
Packaging in mm (L x W x H):	521 x 466 x 141
Filter head:	Polypropylene (PP) + 20% fiberglass
Bowls:	SAN (transparent), PP (black coloured)
Wrench:	ABS
Bowl seals:	O-ring butadiene-acrylonitrile (NBR)
Centrifugal vane + cap:	Polyethylene (PE)
Air drain screw:	Polyamide (PA) + Polyester (2K)
Drain screw under UV:	PVDF
Filtering support:	PP + 20% fiberglass
Filtering sleeve:	Polyester (non-washable) or nylon (washable)
CTN container for activated carbon:	SAN (body) 0,6 mm + PP avec 20% fiberglass(cap) 0,3mm
Filtration surface / volume:	440 cm² with screen + 0,57 L activated carbon
UV-C lamp:	40W with security micro-switch
UV treatment chamber:	316 L stainless steel
Original equipment:	Filtering sleeve 25 µm, CTN filled with activated carbon, 1 UV-C 40W lamp, 1 wrench, 2 wall fixations made of PP + 30 fiberglass + 1 stainless steel wall fixation + 2 connections ¾’’ + 2 connections 1’’ + time label 12m. below 22°C
Options:	drain clock ¼’’ nickel-plated brass, brass gauges 1/8’’
Filtering fineness available (µm): (packs of 5 sleeves)	Non-washable : 1 - 5 - 10 - 25 - 50 - 100 Washable : 150 - 300

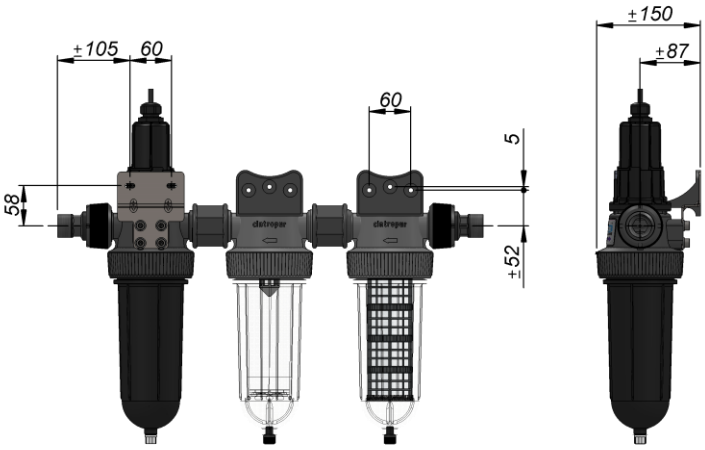

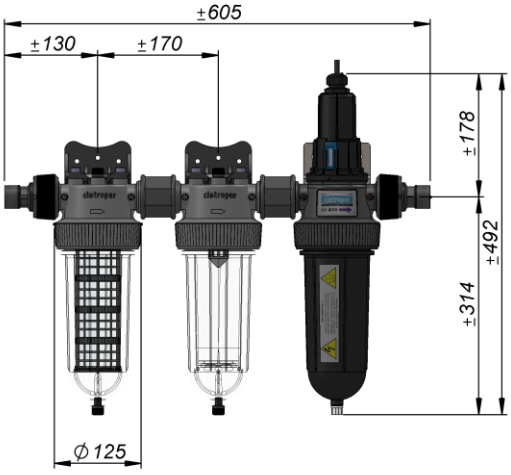

Airwatec SA | Hochstrasse 104d |4700 Eupen | Belgium
T.: +32 87 59 83 30 | F.: +32 87 59 84 40 | E.: info@airwatec.com
VAT/BTW BE 0464.530.129 | www.airwatec.com

Fiche technique

Filter type:	**TRIO-UV 6100 (60W)**
Connection diameter:	1”
Advised flow (m³/h) at 25 mJ/cm²:	5,34
Advised flow (m³/h) at 40 mJ/cm²:	3,34
Working pressure (bar):	10
Max. operating pressure (bar):	16
Max. operating temperature (°C):	50
Weight (kg):	10,7 / 13,5 (with packaging)
Packaging in mm (L x W x H):	800 x 410 x 595
Filter head:	Polypropylene (PP) + 20% fiberglass
Bowls:	SAN (transparent), PP (black coloured)
Wrench:	ABS
Bowl seals:	O-ring butadiene-acrylonitrile (NBR)
Centrifugal vane + cap:	Polypropylene (PP) + 20% GF
Air drain screw:	Polyamide (PA) + 40% GF
Drain screw under UV:	PVDF
Filtering support:	PP + 20% fiberglass
Filtering sleeve:	Polyester (non-washable) or nylon (washable)
CTN container for activated carbon:	SAN (body) 0,6 mm + PP avec 20% fiberglass(cap) 0,3mm
Filtration surface / volume:	530 cm² with screen + 0,75 L activated carbon
UV-C lamp:	60W with security micro-switch
UV treatment chamber:	316 L stainless steel
Original equipment:	Filtering sleeve 25 µm, CTN filled with activated carbon, 1 ballast without display, 1 UV-C 60W lamp, 1 wrench, 3 stainless steel wall fixations + 3 ½‘ drain valves, 2 1’ fittings, 2 1/4’ pressure gauges
Filtering fineness available (µm): (packs of 5 sleeves)	Non-washable : 1 - 5 - 10 - 25 - 50 - 100 Washable : 150 - 300

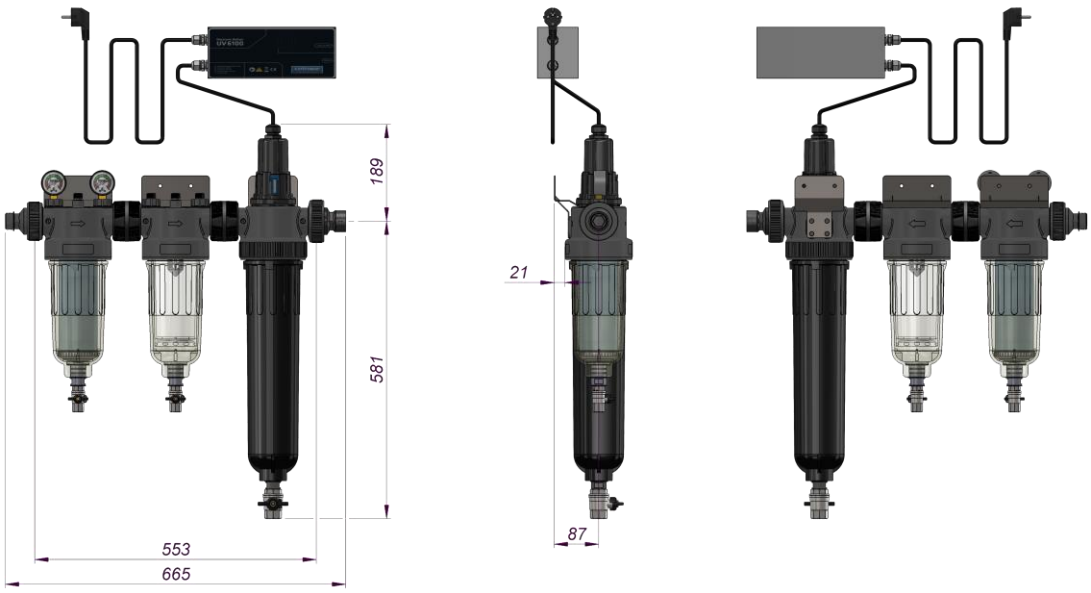

Airwatec SA | Hochstrasse 104d |4700 Eupen | Belgium
T.: +32 87 59 83 30 | F.: +32 87 59 84 40 | E.: info@airwatec.com
VAT/BTW BE 0464.530.129 | www.airwatec.com

Fiche technique

Filter type:	**TRIO-UV 10100 (95W)**
Connection diameter:	2”
Advised flow (m³/h) at 25 mJ/cm²:	7,85
Advised flow (m³/h) at 40 mJ/cm²:	4.90
Working pressure (bar):	10
Max. operating pressure (bar):	16
Max. operating temperature (°C):	50
Weight (kg):	27 / 31 (with packaging)
Packaging in mm (L x W x H):	700 x 800 x 1000
Filter head:	Polypropylene (PP) + 20% fiberglass
Bowls:	SAN (transparent), PP (black coloured)
Wrench:	ABS
Bowl seals:	O-ring butadiene-acrylonitrile (NBR)
Centrifugal vane + cap:	Polypropylene (PP) + 20% GF
Air drain screw:	Polyamide (PA) + 40% GF
Drain screw under UV:	PVDF
Filtering support:	PP + 20% fiberglass
Filtering sleeve:	Polyester (non-washable) or nylon (washable)
Activated carbon retaining strainer:	0.6mm opening
Filtration surface / volume:	1288 cm² with sieve + 4.85 L activated carbon
UV-C lamp:	95W with security micro-switch
UV treatment chamber:	316 L stainless steel
Original equipment:	Filtering sleeve 25 µm, TE empty but with 2 bags of activated carbon, 1 ballast with LCD display, 1 UV-C 95W lamp, 1 wrench, 3 stainless steel wall brackets, 3 ¾’ drain valves, 2 fittings 2‘, 4 loose flanges + collars 2 ½’, 2 flat gaskets, 8 screws, 8 nuts, 8 washers, 2 ¼’ pressure gauges., 2 1/4’ pressure gauges
Filtering fineness available (µm): (packs of 5 sleeves)	Non-washable : 1 - 5 - 10 - 25 - 50 - 100 Washable : 150 - 300

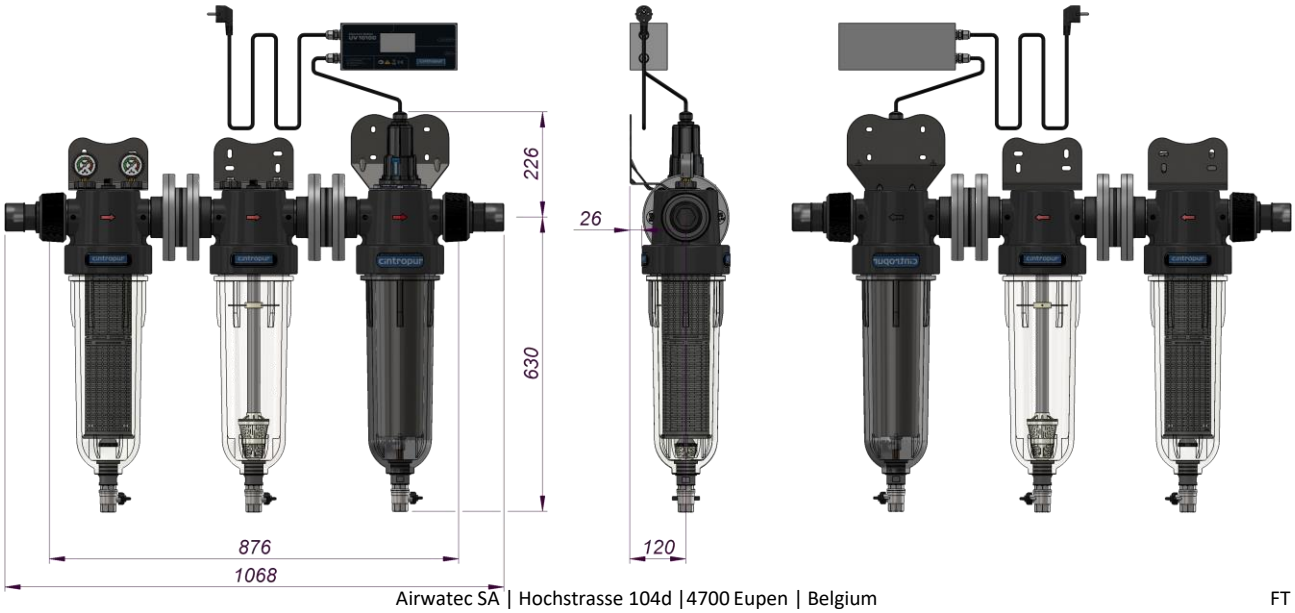

Airwatec SA | Hochstrasse 104d |4700 Eupen | Belgium
T.: +32 87 59 83 30 | F.: +32 87 59 84 40 | E.: info@airwatec.com
VAT/BTW BE 0464.530.129 | www.airwatec.com

cintropur®

WATERFILTRATION & TREATMENT